US005487437A

United States Patent [19]

Avitan

[11] **Patent Number: 5,487,437**

[45] **Date of Patent: Jan. 30, 1996**

[54] **COUPLED DIFFERENTIAL TURNING CONTROL SYSTEM FOR ELECTRIC VEHICLE TRACTION MOTORS**

[76] Inventor: **Isaac Avitan**, c/o Schaeff Inc., P.O. Box 9700, Sioux City, Iowa 51102-9700

[21] Appl. No.: **207,299**

[22] Filed: **Mar. 7, 1994**

[51] **Int. Cl.**[6] **B62D 11/02**

[52] **U.S. Cl.** **180/6.5**; 180/6.28; 318/587; 318/67; 318/77

[58] **Field of Search** 180/6.5, 6.48, 180/6.2, 6.28, 6.24; 318/587, 139, 67, 68, 82, 85, 77, 52

[56] **References Cited**

U.S. PATENT DOCUMENTS

Re. 34,057	9/1992	Middlesworth	180/6.5 X
644,853	3/1900	Fahl	180/6.5
3,481,417	12/1969	Jarret	180/6.5
3,720,863	3/1973	Ringland	318/52
3,870,935	3/1975	Abels	180/6.5
4,128,137	12/1978	Booth	180/6.5
4,449,598	5/1984	Hönes et al.	180/6.5
4,511,825	4/1985	Klimo	180/6.5 X
4,520,299	5/1985	Konrad	180/6.5 X
4,634,941	1/1987	Klimo	180/6.5 X
4,697,661	10/1987	Pajerski et al.	180/6.5
4,926,952	5/1990	Farnam	180/6.5
5,022,476	6/1991	Weege	180/6.5
5,044,043	9/1991	Basham et al.	180/6.5 X
5,058,016	10/1991	Davidovitch	180/6.5 X

Primary Examiner—Margaret A. Focarino
Assistant Examiner—F. Zeender
Attorney, Agent, or Firm—Natter & Natter

[57] **ABSTRACT**

A turning control system for an electric vehicle includes a differential filter which receives a signal indicative of a desired vehicle steer angle and generates a pair of signals representative of proportional speed and direction at a left and a right drive wheel of the vehicle. Speed limit factors generated by an angular speed limit filter and an operator set throttle control are applied to the signals indicative of proportional speeds to generate desired proportional speed signals. The desired proportional speed signals are applied to a motor coupling controller along with signals indicating the actual motor speeds. Error signals representative of the difference between the desired speed and the actual speed of each motor are scaled and integrated to generate lag signals (representative of accumulated error) and the lag signal of one motor is applied to the desired proportional speed signal of the other motor to generate coupled control signals which are applied to respective left and right motor control circuits.
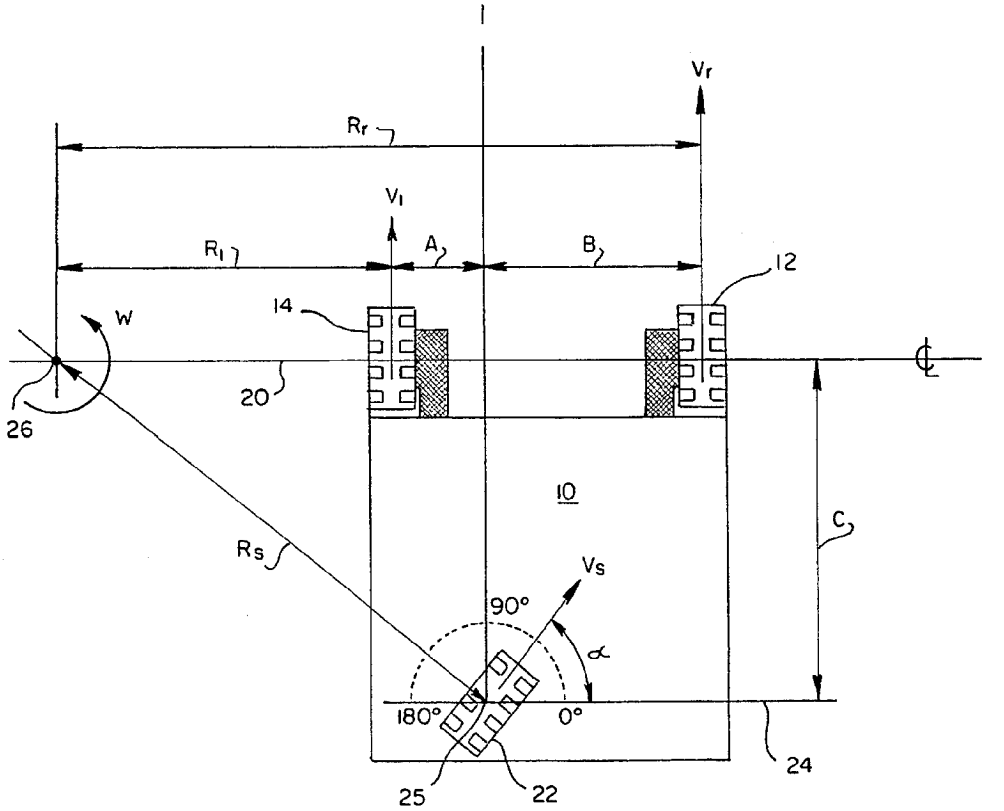
21 Claims, 3 Drawing Sheets